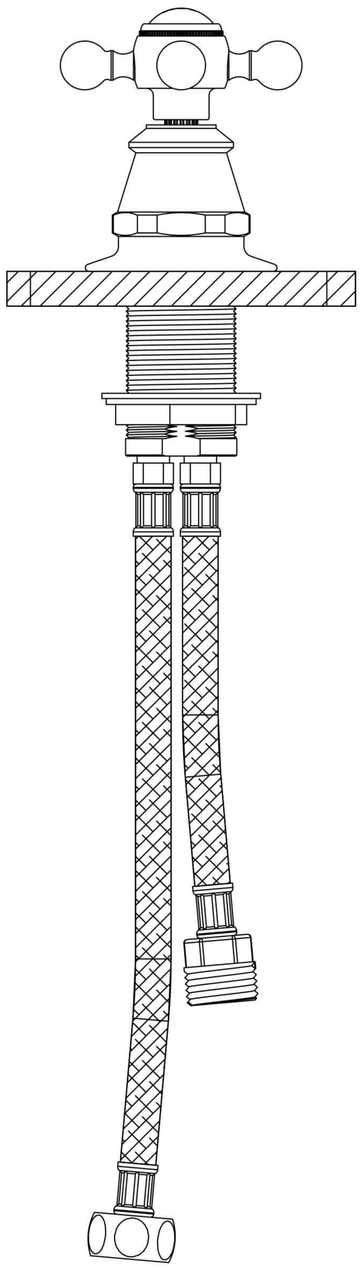

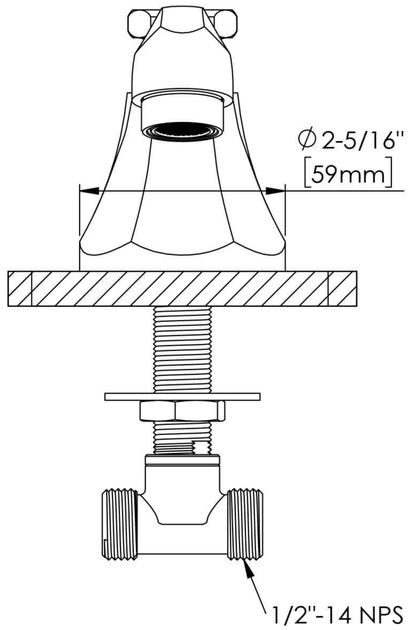
∅2-5/16"
[59mm]
1/2"-14 NPS

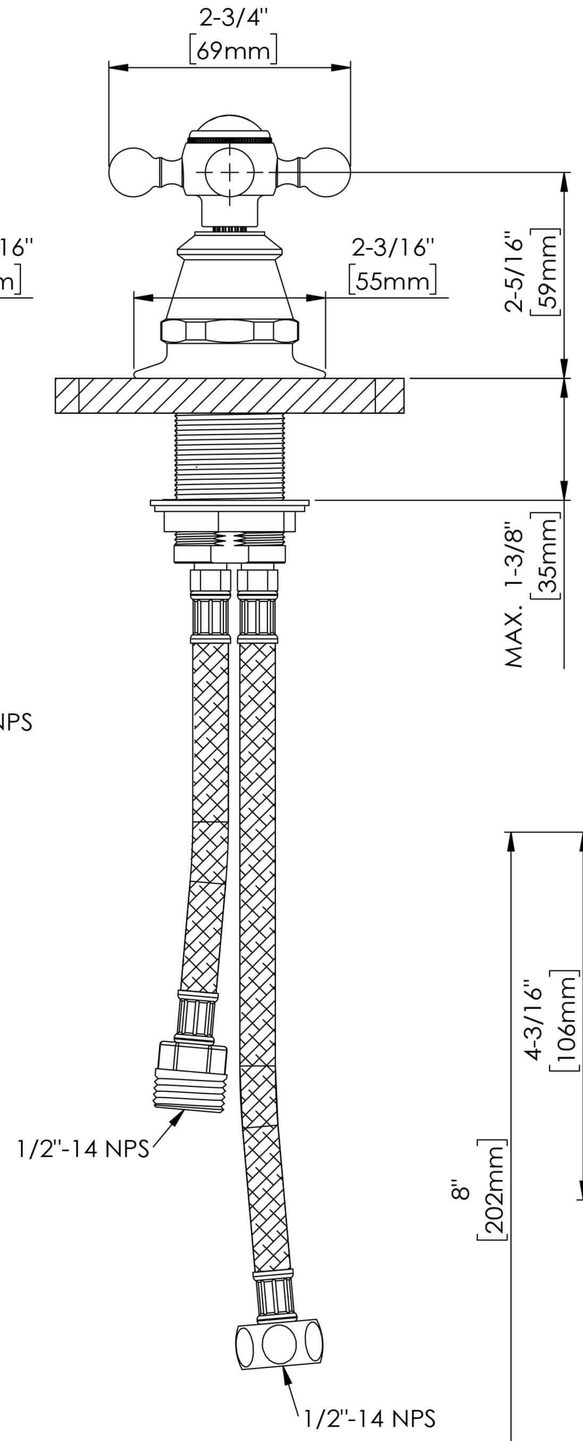
2-3/4"
[69mm]
2-3/16"
[55mm]
2-5/16"
[59mm]
MAX. 1-3/8"
[35mm]
1/2"-14 NPS
1/2"-14 NPS

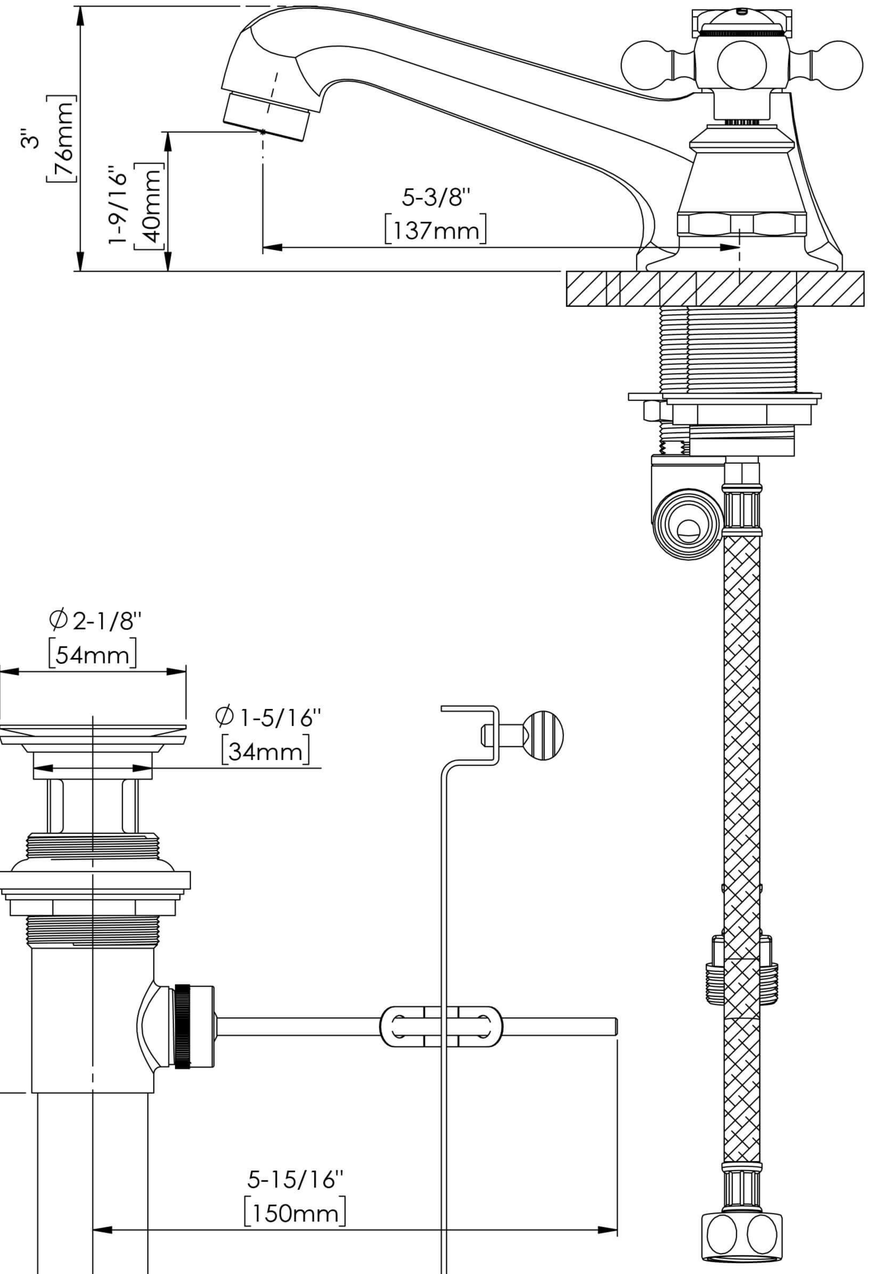
3"
[76mm]
1-9/16"
[40mm]
5-3/8"
[137mm]

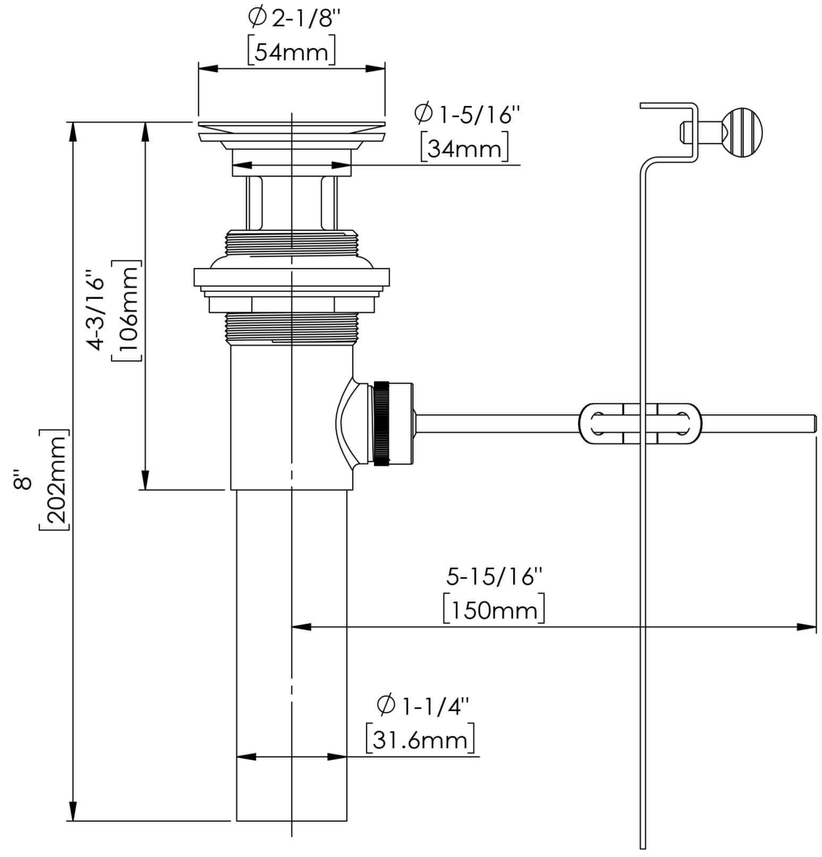
∅2-1/8"
[54mm]
∅1-5/16"
[34mm]
4-3/16"
[106mm]
8"
[202mm]
5-15/16"
[150mm]
∅1-1/4"
[31.6mm]